Data-Sheet-Fixed Capacitor

CKT4000/25/400

GLVAC
www.glvac.cn

Specification	
Capacity C_{max}(nominal)	4000pF
Voltage (Peak Test U_{pt}/Peak Working U_{pw})	30kV/20kV
Capacity tolerance	±5%
Max.Current I_{max} at 0.9MHz with	400Arms
Conduction Cooling	
Net Weight	15kg

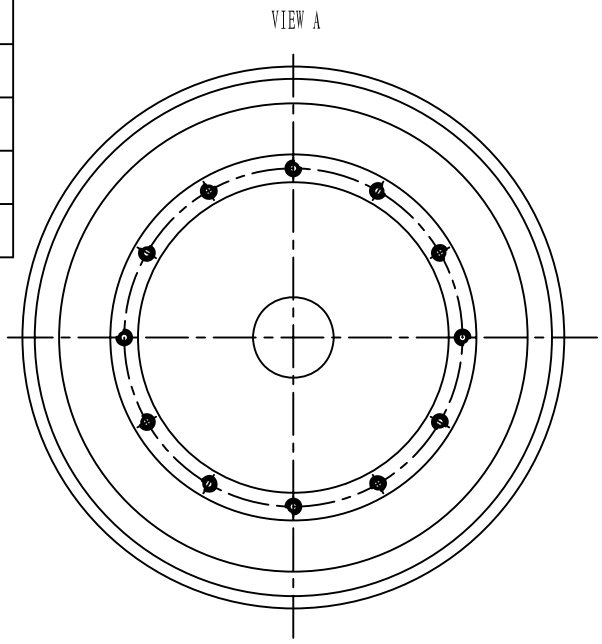

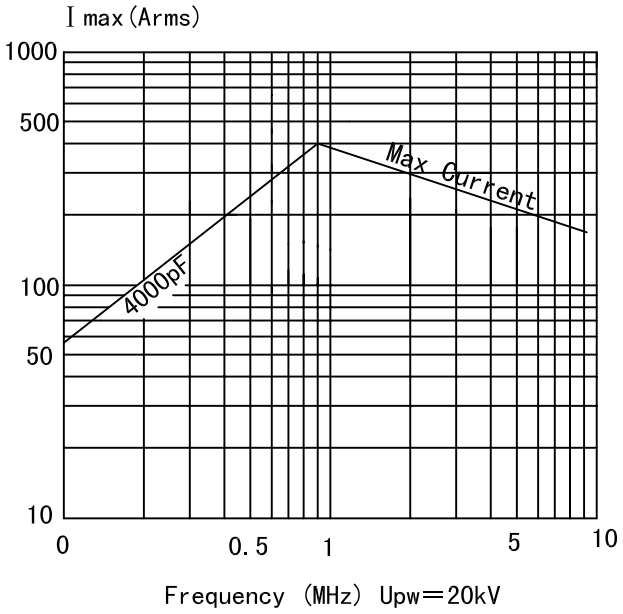

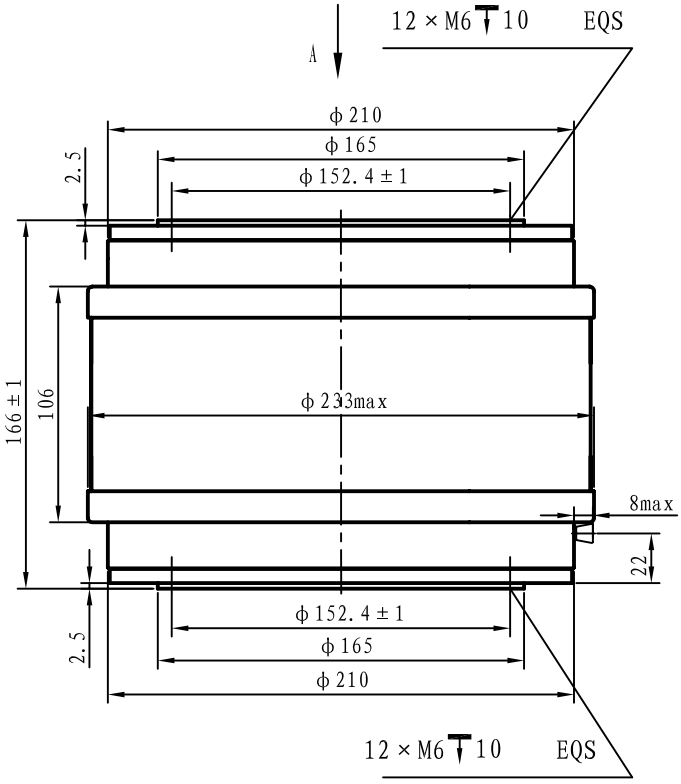

地址：江苏省昆山市开发区西湖路 28 号 网址：www.glvac.cn 邮箱：e-sales@glvac.cn
电话：+86（512）36872110 传真：+86（512）36872122 邮编：215333